LEGEND

- KEY SWITCH CONTROL
- CEILING SUPPORT & HANGER
- CEILING ACCESS PANEL

THIS DRAWING IS IN INTENDED AS A GUIDE. IN ALL CASES SKYFOLD SHOP DRAWINGS SPECIFIC TO EACH PROJECT ARE REQUIRED FOR FINAL BUILD-TO DIMENSIONS.

SKYFOLD MIRAGE®

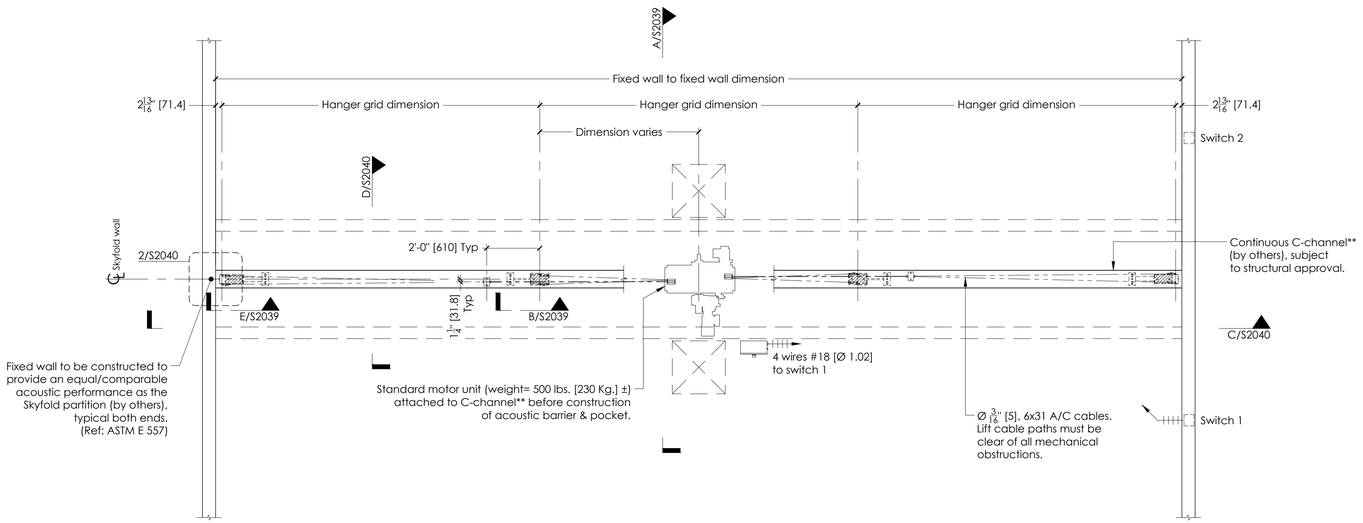

PLAN
SCALE: 3/8" = 1'-0"

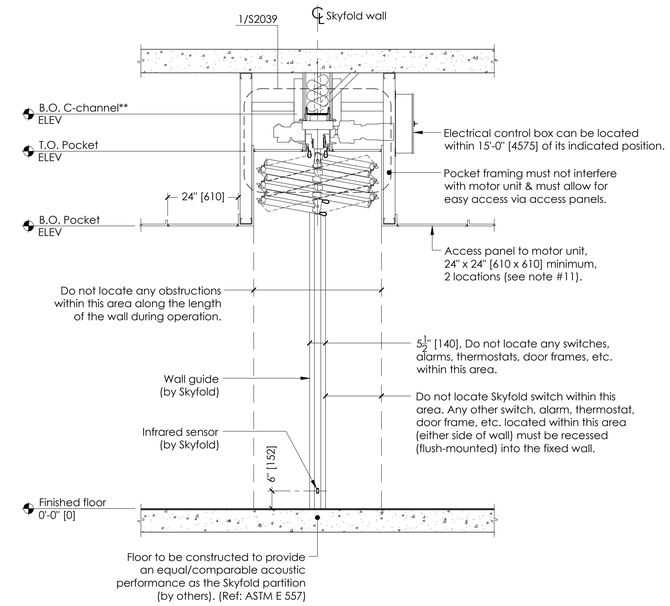

A | SECTION - WALL UP
S2039 | SCALE: 1/2" = 1'-0"

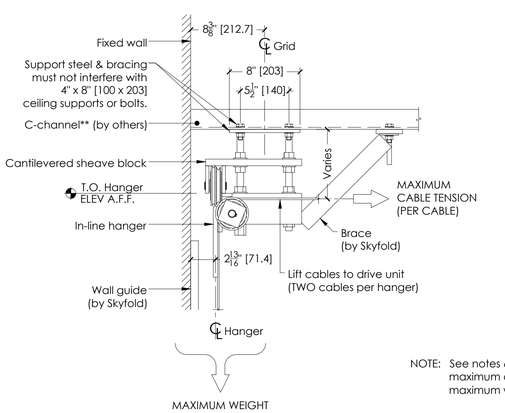

NOTE: See notes 6 & 7 for maximum cable tension & maximum weight per hanger.

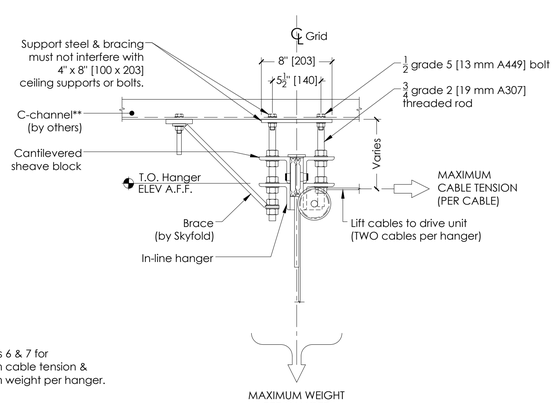

E | SECTION - LOADS @ HANGERS END CONDITION, TYP x2
S2039 | SCALE: 1 1/2" = 1'-0"

B | SECTION - LOADS @ HANGERS MID CONDITION, TYP x2
S2039 | SCALE: 1 1/2" = 1'-0"

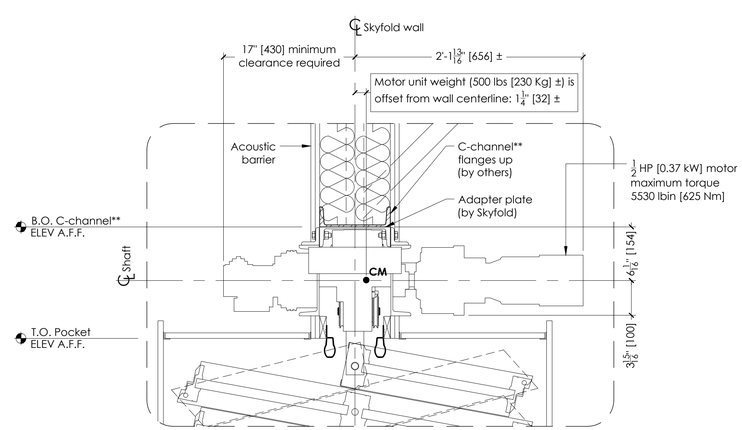

1 | DETAIL - SKYFOLD MECHANICAL
S2039 | SCALE: 1 1/2" = 1'-0"

NOTES TO G.C.

1. Give special attention to any obstructions to ceiling pockets & cables (i.e. ducts, sprinkler pipes, drain pipes, electrical conduits, etc.).
2. One steel C-channel** (flanges up) to be supplied & installed by others. Alternate steel support to be approved by Skyfold.

   **C-channel designation:

   North & South America = C-channel** [C200 x 17]
   Europe = C200 x 75
   Asia = C200 x 80

   Support steel above the wall along its axis must be parallel to the floor within 1/2" [12.7] for the entire length of the wall (this includes loaded deflection).

   Larger deflection must be communicated to Skyfold as it affects support steel height & floor seal height.
3. Attachment details of C-channel** to structure to be designed by others & must not interfere with Skyfold hangers or motor unit or lifting cables.
4. Structural steel support & bracing must not interfere with motor mounts or ceiling supports.
5. Sprayed-on fireproofing (mineral wool & cement) is not recommended for use on the steel support to which Skyfold is attached. An intumescent coating or film is preferred. Local building codes must be respected. Fireproofing is by others.
6. Approximate weight of wall: XXXX lbs. [XXXX Kg.]
   Maximum weight per hanger: XXX lbs. [XXXX Kg.]
7. Maximum cable tension: XXX lbs. [XXX N.]
   (TWO cables per hanger)
8. Specified electrical: 208 VAC, 3Ø, 60 Hz.

   * POWER MUST BE AVAILABLE AT TIME OF INSTALLATION.

   THE ELECTRICAL CONTROL BOX IS TO BE MOUNTED BY THE ELECTRICAL CONTRACTOR.
9. 24 volt key switch controls & boxes to be installed by electrical contractor as per standard light switch. Boxes to be fitted at desired key switch location with suitable cable run back through ceiling void to control box position, including sufficient spare to allow connection. Key switches are supplied by Skyfold & are required on each side of the wall.
10. Motor size: Varies - project-specific.
    Full load amp: XXXX A
11. Skyfold requires two 24" x 24" [610 x 610] (minimum) access panels in acoustic ceiling directly beside motor for installation & maintenance of system. Not required if finished ceiling is suspended ceiling tiles.
12. Drive unit to be installed prior to construction of acoustic barrier & pocket. All pocket construction (gypsum, suspended ceiling tile, framing, etc.) is by others.
13. Do not scale from this drawing. All dimensions must be verified on site.
14. Dimensions in [ ] are in millimeters (mm) unless noted otherwise.

Authorized Skyfold distributor

Project

TYPICAL MIRAGE WALL

Drawing title

X @ X'-X" [XXXX] x X'-X" [XXXX] Finished ceiling
Standard drive unit

PLAN & MECHANICAL DETAILS

Architect		Contractor	
Drawn by	Date	Approved by	Date
Skyfold project No.		Scale	Sheet No.
		As noted	1 of 3
Drawing No.			Revision
S2039			9

SKYFOLD
MIRAGE®

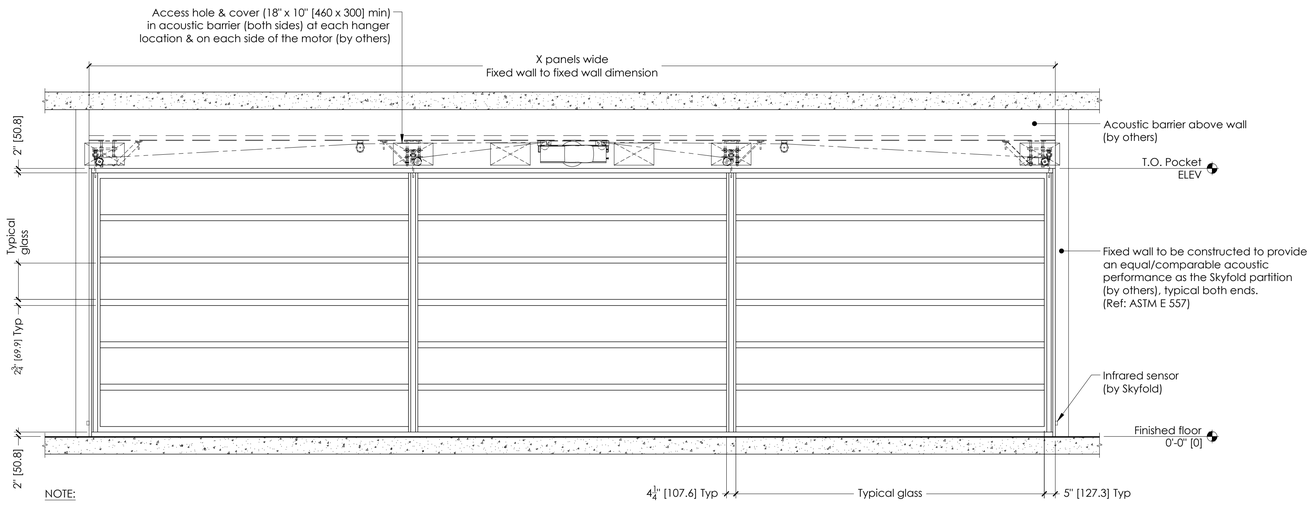

NOTE:

FINISHED FLOOR ±1/4" [6 mm] FROM FLAT LEVEL

FIXED WALL +1/4" [6 mm] / -0 [0 mm] FROM FLAT LEVEL

C | ELEVATION - WALL DOWN

S2039 | SCALE: 3/8" = 1'-0"

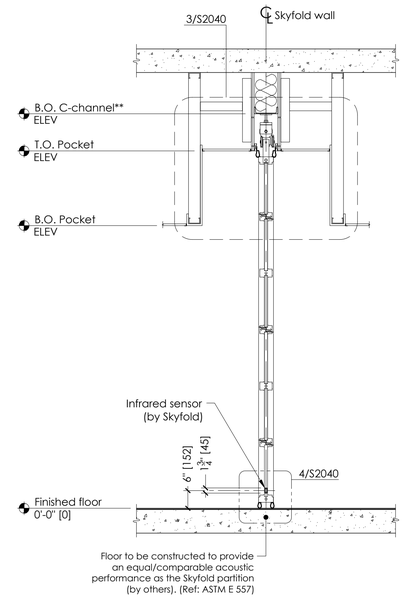

D | SECTION - WALL DOWN

S2039 | SCALE: 1/2" = 1'-0"

NOTES TO G.C.

1. Give special attention to:
   - Any obstructions to ceiling pockets & cables (i.e. ducts, sprinkler pipes, drain pipes, electrical conduits, etc.),
   - Tolerances of fixed walls & finished floor,
   - Removable ceiling tile for top of pocket.
2. STC rating:

   Double laminated glass = 42, as per industry standards

   *SEE NOTE 3 FOR APPLICABLE PANEL COMPOSITION.

   Mirage system is not currently rated.
3. Panel composition: XXXXXXXXXXXXXXXXXXXXXXXX.

   Frame finish: Silver metallic.
4. Skyfold requires two 24" x 24" [610 x 610] (minimum) access panels in acoustic ceiling directly beside motor for installation & maintenance of system. Not required if finished ceiling is suspended ceiling tiles.
5. Drive unit to be installed prior to construction of acoustic barrier & pocket. All pocket construction (gypsum, suspended ceiling tile, framing, etc.) is by others.
6. The floor underneath the wall along its axis must be flat to within 1/4" [6] over the entire length of the wall. A peak to valley undulation of ± 1/4" [6] must not be closer together than 24" [610]. A peak to valley undulation of ± 1/8" [3] must not be closer together than 12" [305].
7. Do not scale from this drawing. All dimensions must be verified on site.
8. Dimensions in [ ] are in millimeters (mm) unless noted otherwise.

**C-channel designation:

North & South America = C-channel** [C200 x 17]
Europe = C200 x 75
Asia = C200 x 80

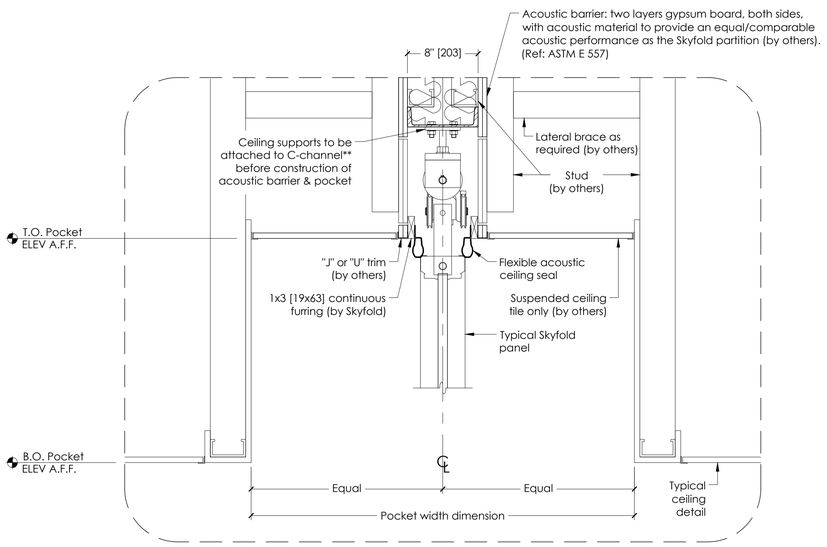

3 | POCKET DETAIL

S2040 | SCALE: 1 1/2" = 1'-0"

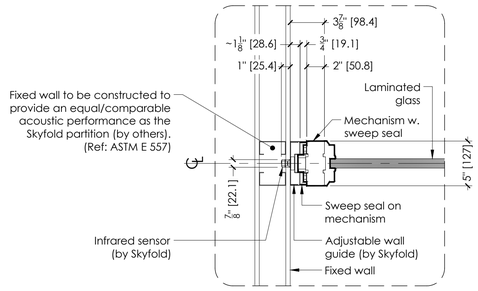

2 | WALL GUIDE & SWEEP DETAIL

S2039 | SCALE: 1 1/2" = 1'-0"

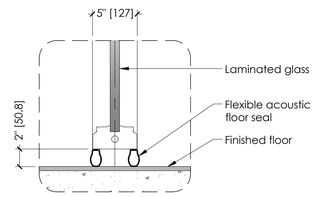

4 | FLOOR SEAL DETAIL

S2040 | SCALE: 1 1/2" = 1'-0"

THIS DRAWING IS IN INTENDED AS A GUIDE. IN ALL CASES SKYFOLD SHOP DRAWINGS SPECIFIC TO EACH PROJECT ARE REQUIRED FOR FINAL BUILD-TO DIMENSIONS.

Authorized Skyfold distributor

Project

TYPICAL MIRAGE WALL

Drawing title

X @ X'-X" [XXXX] x X'-X" [XXXX] Finished ceiling
Standard drive unit

PANEL & POCKET DETAILS

Architect		Contractor	
Drawn by	Date	Approved by	Date
Skyfold project No.		Scale	Sheet No.
		As noted	2 of 3
Drawing No.			Revision
S2040			9