ACOUSTIC BARRIER
AS PER ASTM E 557
(BY OTHERS)

LIFTING CABLE
(TWO PER HANGER)

CABLE DEFLECTING SHEAVE

HANGER ASSEMBLY

MOTOR

AIR DUCT
(BY OTHERS)

SUPPORT STEEL TO
STRUCTURE
ABOVE (BY OTHERS)

AIR DUCT
(BY OTHERS)

8" [200 mm] STEEL
CHANNEL OR ALTERNATE
MINIMUM 6" [150 mm]
WIDE STEEL (ie I-BEAM)
TO BE APPROVED BY
SKYFOLD. STEEL IS BY
OTHERS.

FINISHED CEILING
(BY OTHERS)

POCKET
(BY OTHERS)

PIPES
(BY OTHERS)

F

ACCESS PANEL
(BY OTHERS)

PANTOGRAPH
ASSEMBLY

FLEXIBLE ACOUSTIC
FLOOR SEAL

INFRARED SENSOR

GLASS PANEL ASSEMBLY

WALL GUIDE
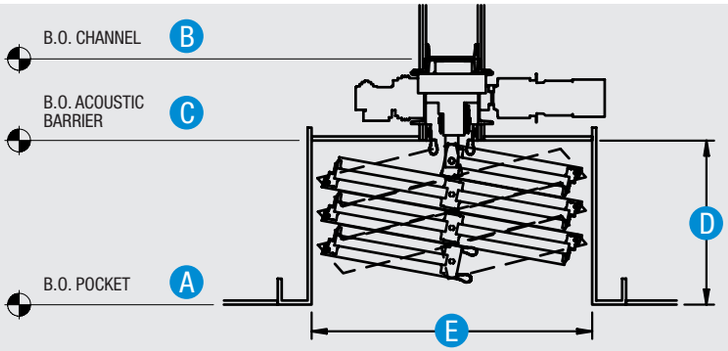
SKYFOLD
MIRAGE®